Akbari–Ganji Method for Solving Equations of Euler–Bernoulli Beam with Quintic Nonlinearity

Iman Khatami [1], Mohsen Zahedi [2] and S. Abolfazl Zahedi [3,*], Mohammad Yaghoub Abdollahzadeh Jamalabadi [1]

[1] Department of mechanical engineering, Chabahar Maritime University, Iran; iman.khatami81@gmail.com
[2] Department of computer engineering, University of Isfahan, Iran; seyyed.mohsen.zahedi@gmail.com
[3] School of engineering and sustainable development, De Montfort University, UK; Abolfazl.Zahedi@dmu.ac.uk
* Correspondence: Abolfazl.Zahedi@dmu.ac.uk; Tel.: +44-116-201-3971

Received: date; Accepted: date; Published: date

Abstract:

In many real word applications, beam has nonlinear transversely vibrating. Solving of nonlinear beam systems are complicated because of the high dependency of the system variables and boundary conditions. It is important to have an accurate parametric analysis for understanding the nonlinear vibration characteristics. This paper presents an approximate solution of a nonlinear transversely vibrating beam with odd and even nonlinear terms using the Akbari–Ganji's Method (AGM). This method is an effective approach to solve nonlinear differential equations. AGM already used in the heat transfer science for solving differential equations, and in this research for the first time is applied to find the approximate solution of nonlinear transversely vibrating beam. The advantage of creating new boundary conditions in this method in additional of predefined boundary conditions is checked for the proposed nonlinear case. To illustrate the applicability and accuracy of the AGM, the governing equation of transversely vibrating nonlinear beams are treated with different initial conditions. Since the simply supported and clamped-clamped structures can be encountered in many engineering applications, these two boundary conditions are considered. The periodic response curves and the natural frequency are obtained by AGM and contrasted with energy balance method (EBM) and the numerical solution. Results are shown the present method provide excellent agreements in contrast with numerical and EBM calculations. In most cases AGM applied straightforward to obtain the nonlinear frequency– amplitude relationship for dynamic behaviour of vibrating beams. The natural frequencies tested for various values of amplitude are clearly stated the AGM is an applicable method for the proposed nonlinear system. It is demonstrated that this technique saves computational time without compensate the accuracy of solution. This approach can be easily extended to other nonlinear systems and is therefore widely applicable in engineering and other sciences.

Keywords: Nonlinear beam transverse vibration; quintic nonlinear beam; Akbari–Ganji's Method; energy balance method

---

1. Introduction

Beam is an important mechanical element that also use as a simplest and accurate model for analysing of a complex engineering component. Structure like turbine and compressor rotor blades, airplane wings, robot arms, spacecraft antennae, structure of buildings, bridges, and vibratory drilling can be modelled as a beam. Beam capable to carries out both static and dynamic loads. These loads cause the deformation happens in the geometry that causes nonlinear terms adds in formulation. Although some classical theories such as classical Euler-Bernoulli [1] and Timoshenko [2] have been formulated beam problem in linear custom for decades, it is a nonlinear subject. Simplification of beam model with linear theory in sensitive structures with large deformation causes

harmful effects and should be revised. In some cases, the nonlinear responses can effectively overcome the shortcomings of linear isolation in the isolation bandwidth and stability [3]. In these cases, it is important to know how far the characteristics of the dynamic response deviate from those defined via the linear theory.

The large displacements in the beam is one source of shifting from classical beam theory and cause geometric and other nonlinearities to be significant. However, the study considered the nonlinear term in beam formulation is very limited [4-5]; many researchers reported transversely vibrating beam based on linear vibration models, which are usually sufficient for predicting the dynamic responses when the system dealing with small deformations [6-7]. Most of these studies focused on classical Euler–Bernoulli formulations and Timoshenko theory for beam bending. As an early example, Parnell and Cobble explored beam's motion with clamped end and uniform loading by applying Euler–Bernoulli's model [8]. One of the main reasons for such hypothesis, is to find the parametric response.

Evaluating the nonlinear vibration of beams is an important concern in the structural engineering. Due to the need to model size-dependent structural response of a variety of new materials, there has been increased interest in developing non-linear vibration beam. In the structure such as high-rise buildings, long-span bridges, and aerospace vehicles the study of nonlinear dynamic behaviour is required at large amplitudes [9]. By increasing the amplitude of oscillation, these structures are subjected to non-linear vibrations which often lead to material fatigue and structural damage. These effects become more significant around the natural frequencies of the system. Therefore, it is very important to address an accurate solution towards the non-linear vibration characteristics of these structures. Consequently, higher order nonlinear terms are developed by introducing additional deformation measurers and material characteristics parameters to the classical theory of beam.

The influence of the nonlinear terms on the beam vibration transmission of the elastic structures has not been paid much attention. The bending stiffness and resulting frequencies of vibration will change as the relative magnitude of the deformation changes in the nonlinear response. One of the first manuscript to investigate the effect of nonlinear terms in the beam is belong to Evenson [10] to research on the nonlinear beam vibrations for a variety of support conditions. The transversely vibrating beam will formulate by a partial differential equation of motion, an external forcing function, boundary conditions and initial conditions. In order to prevent resonant and vibration problems in the beam, the natural frequencies of beam must be estimated, and an appropriate control system must be applied. The nonlinearities couple the modes of vibration and can lead to modal interactions where energy is transferred between modes. Consider of only linear vibration part has significant advantages, including simplicity to model with no additional energy. But it would be not a comprehensive and accurate solution.

In order to study the nonlinear vibration characteristics of the beams, researchers apply different analytical techniques. In more recent studies of nonlinear beam vibration, coupled finite element model (FEM) with nonlocal elasticity or a modified couple stress or strain gradient theory are used [11-13]. The non-linear behaviour of a buckled beam to a primary resonance of first vibration mode in the presence of internal resonances has been investigated by Emam and Nayfeh [12]. Formica et al. [13] researched on coupling FEM with parameter continuation to investigate bifurcations and periodic responses of nonlinear beam under harmonic and transverse direct excitation. One well-known analytical practice to solve nonlinear equations is the perturbation technique. Several methods in this family, such as the variation iteration method (VIM) [14-15], the homotopy perturbation method (HPM) [16-19], and the Adomian decomposition method (ADM) [20], have been developed to solve the nonlinear equations.

There are several engineering methods in the literature for analysing dynamics of vibrating beams [21-24]. Sedighi et al., [21] solved the nonlinear transversely vibrating beams by applying an auxiliary term. Principally, perturbation methods are useful when small parameters exist in nonlinear systems where the solution can be analytically expanded into power series of the parameters. Christoph et al., [22] used the line contact formulations in the vibration beam to show an accurate and robust mechanical model. The proposed computational efficiency considerably decreased with increasing contact angles. Mergan [25] investigated the nonlinear vibration of axially beams subjected to external harmonic excitations. He used Hamilton's energy principle to solve a nonlinear set of governing equations of motions. When the system is under the higher deformation mechanism, typically found in aerospace applications, nonlinearity terms should be included for the accurate model. Numerical solutions such as boundary element and finite element methods have no capability of giving parametric responses. Therefore, they cannot be applied to investigate the global and qualitative behaviour of the system. Ye et al., [26] studied the nonlinear transverse vibrations of a slightly curved beam with nonlinear boundary conditions.

To extend the research and follow high order nonlinear effects, in this study the transversely vibrating beams with odd and even nonlinearities are solved by Akbari–Ganji's Method (AGM). This technique is a powerful and accurate approach for solving nonlinear equations in comparison with other semi analytical methods [27]. The main advantage of AGM is to obtain the accurate solution by simple algebraic calculations. The solutions are effective not only for weakly nonlinear systems, but also for strong nonlinear terms. Some examples reveal that even the lowest order approximations in the solution trigger high accuracy. In this method in order to covert the partial differential equation to an ordinary differential equation the Laplace transform theorem will be used. A new additional conditional would be generated regarding the differential equation and its derivatives to compromise the order of nonlinearities in the solutions.

Since it is important to have an accurate parametric analysis for understanding the beam nonlinear vibration characteristics, in this manuscript, AGM is applied for the first time to simply supported and clamped-clamped structures with different parameters and initial conditions. This paper aims to promote the application of AGM as a modern analytical approach to the governing equation of transversely the vibrating quintic nonlinear beam. The AGM is used for the first time to find the parametric solution of the nonlinear frequency– amplitude relationship for dynamic behavior of vibrating beams with quintic nonlinearity. Two powerful techniques, the numerical method and EBM [28-30], are applied to comparison the result. EBM is an analytical approach that proposed by He [23]. In this approach, first a variational principle for the nonlinear oscillation is generated. After that, a Hamiltonian formulation is constructed from the angular frequency obtained by the collocation method. The accuracy and computational effort of analytical study highly rely on the capability of the approaches and the flexibility of the computer program. The comparison of the results found by three different methods, reveal that in most cases AGM applied straightforward to obtain the nonlinear frequency– amplitude relationship for dynamic behaviour of vibrating beams. It is demonstrated that this technique saves computational time without compensate the accuracy of solution. Furthermore, AGM is more suitable for computer programming. In this paper, the application of AGM to solve the vibrating quintic nonlinear beam is reported for the first time. The paper is planned as follows: in Section 2, governing equation of transversely vibrating quintic nonlinear beams is explained. The fundamental formulations of AGM is explored in Section 3; and in Section 4, the AGM is implemented to solve the transversely vibrating quintic nonlinear beams with illustrative numerical approximation to verify the accuracy.

2. Formulation of the vibrating beam

In this section, two different case studies of vibrating beams are thoroughly investigated. A schematic of a uniform beam carrying a lumped mass along its span is depicted in Figure 1. It considers as a case study one. The length and mass of the beam are l and m, respectively. M is the

lumped mass at point the d, K_r represents the rotational stiffness of spring, and s is the arc length of a d_s element.

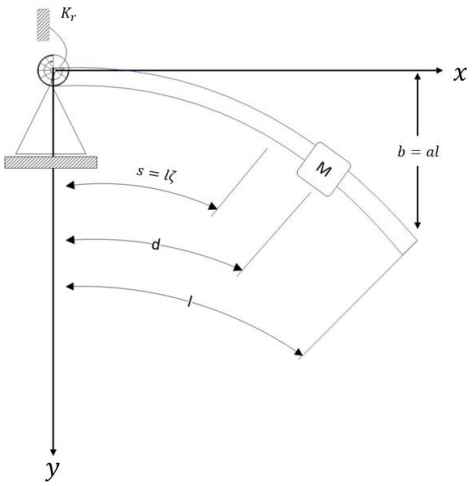

Figure 1. Configuration of a beam carrying a lumped mass

In order to calculate kinetic and potential energy of beam, the following parameters are applied:

$$\xi = \frac{s}{l}, \eta = \frac{d}{l}, \mu = \frac{M}{ml}. \tag{1}$$

Where ξ and η represent the span and lumped mass length that non-dimensionalized by the length of the beam. μ represents the mass ratio. Kinetic (T) and potential (U) energies of beam are derived as follows:

$$T = \frac{ml}{2}\int_0^1 [1 + \mu\delta(\xi - \eta)](\dot{x}^2 + \dot{y}^2)d\xi, \tag{2}$$

and

$$U = \frac{EIl\lambda^4}{2}\int_0^1 \left[y''^2 + (\lambda y' y'')^2 + \lambda^4 y'^4 y''^4\right]d\xi. \tag{3}$$

Where $\lambda = 1/l$, $\delta(\xi - \eta)$ is Dirac function, and ξ represents dimensionless arc length. It should be noted that in equations (2) and (3), the rotary inertia and shear deformation are neglected.

By using the technique of separating variables, the approximate solution is got in the form of $v(t)\phi(\xi)$ where $v(t)$ is an unknown function of time and $\phi(\xi)$ is a normalized eigenfunction of the corresponding linear problem. The superscript dot notation represents differentiation with respect to the time variable. According to the Rayleigh-Ritz procedure with single linear mode, Lagrangian function is given by:

$$\begin{aligned} L = \frac{ml}{2}\Big[&\sigma_1\dot{v}^2 + \sigma_3\lambda^2 v^2\dot{v}^2 + \sigma_4\lambda^2 v^2\dot{v}^2 + \sigma_5\lambda^4 v^4\dot{v}^2 + \sigma_6\lambda^4 v^4\dot{v}^2 \\ &- \frac{EI}{m}\lambda^4(\sigma_2 v^2 + \sigma_7\lambda^2 v^4 + \sigma_8\lambda^4 v^4)\Big], \end{aligned} \tag{4}$$

where σ_1 to σ_8 are following functions:

$$\begin{cases} \sigma_1 = \int_0^1 \phi^2 d\xi + \mu\phi^2(\eta), \\ \sigma_2 = \int_0^1 \phi''^2 d\xi, \\ \sigma_3 = \int_0^1 \left(\int_0^\xi \phi'^2\, d\xi\right)^2, \\ \sigma_4 = \mu\left[\left(\int_0^\xi \phi'^2\, d\xi\right)^2\right]_{\xi=\eta}, \end{cases} \qquad \begin{cases} \sigma_5 = \int_0^1 \left[\left(\int_0^\xi \phi'^2\, d\xi\right)\left(\int_0^\xi \phi'^4\, d\xi\right)\right] d\xi, \\ \sigma_6 = \mu\left[\left(\int_0^\xi \phi'^2\, d\xi\right)\left(\int_0^\xi \phi'^4\, d\xi\right)\right]_{\xi=\eta}, \\ \sigma_7 = \int_0^1 \phi'^2 \phi''^2 d\xi, \\ \sigma_8 = \int_0^1 \phi'^4 \phi''^2 d\xi. \end{cases} \tag{5}$$

By assume an unextensional beam condition, the length of the neutral axis of the beam will be constant. Therefore, the following constraint relation should apply.

$$(1 + \lambda x'^2)^2 + \lambda y'^2 = 1. \tag{6}$$

Euler-Lagrange equation is given by:

$$\frac{d}{dt}\left(\frac{\partial L}{\partial \dot{v}}\right) - \frac{\partial L}{\partial v} = 0, \tag{7}$$

By substitute of Lagrange function (equation (4)) into equation (7), the formulation for a restrained uniform beam carrying an intermediate lumped mass is obtained by:

$$\ddot{q} + \lambda q + \kappa_1 q^2 \ddot{q} + \kappa_1 q \dot{q}^2 + \kappa_2 q^4 \ddot{q} + 2\kappa_2 q^3 \dot{q}^2 + \kappa_3 q^3 + \kappa_4 q^5 = 0, \tag{8}$$

where,

$$\kappa_1 = \frac{\sigma_3\sigma_4}{\bar{\Gamma}^4\sigma_1}, \kappa_2 = \frac{\sigma_5\sigma_6}{\bar{\Gamma}^4\sigma_1}, \kappa_3 = \frac{2\sigma_7}{\sigma_2}, \kappa_4 = \frac{2\sigma_8}{\sigma_1}. \tag{9}$$

$\bar{\Gamma}$ in equation (9) is given by:

$$\bar{\Gamma} = \sqrt[4]{\frac{m\bar{\omega}}{EI}}\, l, \tag{10}$$

where $\bar{\omega}$ is the fundamental frequency of the beam. q in equation (8) is the dimensionless beam displacement and is equal to $\frac{\bar{\Gamma}v}{l}$, and dots refer to derivatives according to the new dimensionless time ($\tau = \sqrt{\frac{EI\lambda^4}{m}\frac{\sigma_1}{\sigma_2}}t$). The initial conditions of equation (8) are chosen as:

$$q(0) = A, \dot{q}(0) = 0. \tag{11}$$

The values of $\kappa_1, \kappa_2, \kappa_3$ and κ_4 for three calculation modes are presented in Table 1.

Table 1. Values of dimensionless rotational stiffness of spring κ_i in equation (8) for three modes after [23]

	Mode 1	**Mode 2**	**Mode 3**
$\boldsymbol{\kappa_1}$	0.326845	1.642033	4.051486
$\boldsymbol{\kappa_2}$	0.129579	0.913055	1.665232
$\boldsymbol{\kappa_3}$	0.232598	0.313561	0.281418

κ_4	0.087584	0.204297	0.149677

The second case study in this paper is transversely vibrating quintic nonlinear beam. Figure 2 shows an Euler- Bernoulli beam of length l for two different boundary conditions under force F. Figure 2 (a) is simply supported (S-S) beam and Figure 2 (b) is clamped-clamped (C-C) beam. Typical practical applications of S-S beams with point loadings include bridges, beams in buildings, and beds of machine tools [31]. The C-C beams applies to mechanisms such as mechanical transducer and accelerometers. I is the second moment of inertia, and E represents the modulus of elasticity.

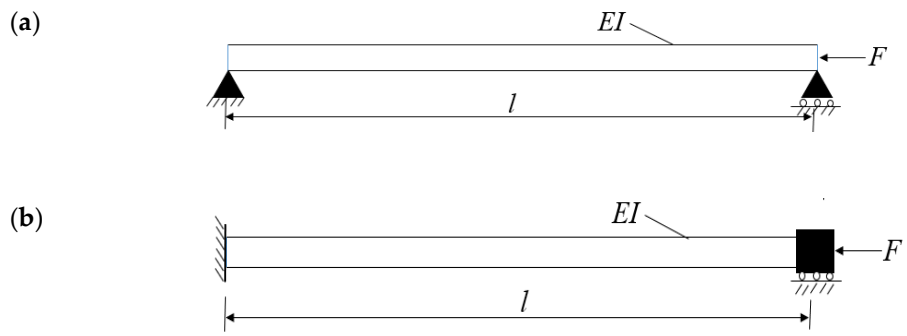

Figure 2. Transversely vibrating quintic nonlinear beam **(a)** simply supported (S-S) and **(b)** clamped-clamped (C-C)

The differential equation in the deformed situation is obtained by:

$$\frac{d^2}{dx^2}\left(\frac{EIw''(x,t)}{\sqrt{1+w'^2(x,t)^2}}\right)+Fw''(x,t)\left[1+\frac{3}{2}w'^2(x,t)\right]+m\ddot{w}(x,t)=0, \tag{12}$$

where w is transverse deflection of the beam. The boundary conditions for case (a) and (b) are

S-S beam

$$w(0,t)=w''(0,t)=0,\quad w(l,t)=w''(l,t)=0, \tag{13}$$

C-C beam

$$w(0,t)=w'(0,t)=0,\quad w(l,t)=w'(l,t)=0. \tag{14}$$

By assuming the solution of equation (12) as $w(x,t)=\phi(x)\bar{q}(t)$ where $\phi(x)$ is the first eigenmode of the beam vibration. $\phi(x)$ for S-S beam is given by [30]:

$$\phi(x)=\sin\left(\frac{\pi x}{l}\right), \tag{15}$$

and for C-C beam is expressed as:

$$\phi(x)=\left(\frac{x}{l}\right)^2\left(1-\frac{x}{l}\right)^2. \tag{16}$$

By apply the Galerkin method the differential equation in the deformed situation is driven by:

$$\int_0^1 \left(\mathrm{EIw}^4 \left[1 - \frac{3}{2}\mathrm{w}'^2(\mathrm{x},\mathrm{t}) + \frac{15}{8}\mathrm{w}'^4(\mathrm{x},\mathrm{t})\right] - 9\mathrm{EIw}'''(\mathrm{x},\mathrm{t})\mathrm{w}''(\mathrm{x},\mathrm{t})\mathrm{w}'(\mathrm{x},\mathrm{t}) + \frac{45}{2}\mathrm{EIw}''^3(\mathrm{x},\mathrm{t})\mathrm{w}'^2(\mathrm{x},\mathrm{t}) + \mathrm{Fw}''(\mathrm{x},\mathrm{t})\left[1 + \frac{3}{2}\mathrm{w}'^2(\mathrm{x},\mathrm{t})\right]\mathrm{m}\ddot{\mathrm{w}}(\mathrm{x},\mathrm{t})\right) + \phi(\mathrm{x})\mathrm{dx} = 0. \tag{17}$$

By introduce $\tau = \sqrt{\frac{EI}{ml^4}}$, the non-dimensional nonlinear equation of motion is obtained as follow:

$$\frac{\mathrm{d}^2}{\mathrm{dt}^2}\mathrm{q}(\tau) + \mathrm{aq}(\tau) + \mathrm{bq}(\tau)^3 + \mathrm{cq}(\tau)^5 = 0. \tag{18}$$

The parameters of equation (18) for S-S beam are as follow: $a = \pi^4 - \frac{Fl^2\pi^2}{EI}$, $b = -\frac{3}{8}\pi^6 - \frac{3}{8}\frac{Fl^2\pi^4}{EI}$ and $c = \frac{15}{64}\pi^8$. For C-C beam the parameters are $a = 500.534 - \frac{12.142Fl^2}{EI}$, $b = -6.654 - \frac{0.169Fl^2}{EI}$ and $c = -0.3673$. In the next section, the fundamental formulations of AGM will describe.

3. AGM formulation

The equation of a vibration system can be written as:

$$\mathrm{g}\left(\ddot{\mathrm{x}}, \dot{\mathrm{x}}, \mathrm{x}, \mathrm{F}_0\sin(\omega_0\mathrm{t})\right) = 0, \tag{19}$$

ω_0 *is the* angular frequency of the external harmonic force and F_0 represents the maximum amplitude of vibration system. The initial conditions are given as:

$$\mathrm{x}(0) = \mathrm{x}_0,\ \dot{\mathrm{x}}(0) = 0. \tag{20}$$

It is worth to mention AGM method can solve vibrating system with and without external forces. Vibration systems without any external forces are presented by the following differential equation:

$$\mathrm{g}(\ddot{\mathrm{x}}, \dot{\mathrm{x}}, \mathrm{x}) = 0. \tag{21}$$

The general solution of this oscillation system is assumed as:

$$\mathrm{x}(\mathrm{t}) = \exp\,(-\beta\mathrm{t})\{\mathrm{A}\cos(\omega\mathrm{t}) + \mathrm{B}\sin(\omega\mathrm{t})\}, \tag{22}$$

or alternatively

$$\mathrm{x}(\mathrm{t}) = \exp\,(-\beta\mathrm{t})\alpha\cos(\omega\mathrm{t} + \varphi), \tag{23}$$

where $\alpha = \sqrt{\mathrm{A}^2 + \mathrm{B}^2}$ and $\varphi = \arctan(\mathrm{B}/\mathrm{A})$. In order to have a more accurate answer, some terms can be added to equation (23) as:

$$\mathrm{x}(\mathrm{t}) = \exp\,(-\beta\mathrm{t})\{\alpha\cos(\omega\mathrm{t} + \varphi_1) + \gamma\cos(2\omega\mathrm{t} + \varphi_2)\}. \tag{24}$$

In vibration systems without damping parameters the $\exp\,(-\beta\mathrm{t})$ term will be deleted from the solution. By applying an external force, $\mathrm{F}_0\sin(\omega_0\mathrm{t})$, on the vibrational systems, the general solution (equation (19)) will be consisted of two parts. The particular solution (x_p) and the harmonic solution (x_h) as follows:

$$x_p(t) = R\cos(\omega_0 t) + Q\sin(\omega_0 t),$$
$$x_h(t) = \exp(-\beta t)\{A\cos(\omega t) + B\sin(2\omega t)\}. \tag{25}$$

By defining $\alpha = \sqrt{A^2 + B^2}$, $\gamma = \sqrt{R^2 + Q^2}$, $\varphi = \arctan(B/A)$, and $\theta = \arctan(Q/R)$ the general solution will yield as:

$$x(t) = x_h(t) + x_p(t) = \exp(-\beta t)\{\alpha\cos(\omega t + \varphi)\} + \gamma\cos(\omega_0 t + \theta). \tag{26}$$

The same approach as vibration system without damping, more accurate solution is given by:

$$x(t) = \exp(-\beta t)\{\alpha\cos(\omega t + \varphi_1) + \rho\cos(2\omega t + \varphi_2)\} + \gamma\cos(\omega_0 t + \theta). \tag{27}$$

In summary the exact general solution for vibrating system is led to:

$$x(t) = \exp(-\beta t)\{\sum_{k=1}^{\infty} \alpha_k\cos(k\omega t + \varphi_k)\} + \gamma\cos(\omega_0 t + \theta). \tag{28}$$

The unknown parameters in equation (28) will be computed by applying AGM and use initial conditions. The β value is zero for a system without damping. Therefore, for a system under vibration equations (27) and (28) are changed to equations (29) and (30), respectively:

$$x(t) = \{\alpha\cos(\omega t + \varphi_1) + \rho\cos(2\omega t + \varphi_1)\} + \gamma\cos(\omega_0 t + \theta), \tag{29}$$

$$x(t) = \{\sum_{k=1}^{\infty} \alpha_k\cos(k\omega t + \varphi_k)\} + \gamma\cos(\omega_0 t + \theta). \tag{30}$$

In general, the solution of undamped vibrational system in both states (with and without external force) is as follow:

$$x(t) = \alpha\cos(\omega t + \varphi) + \gamma\cos(\omega_0 t + \theta). \tag{31}$$

In AGM, there are two different approaches to obtain the unknown parameters. The first path is to apply the answer of differential equation to find unknown parameters and the second one is using the main differential equation and its derivatives. In the first method, by considering the initials condition as:

$$x(t) = x(IC), \tag{32}$$

where IC in equation (32) is the abbreviation of initial conditions (see equation (20)) the unknown parameter will be cleared.

In the second method, the assumed function will be substituted into the solution of the main differential equation instead of its dependent variable (x). The general equation of vibration systems is written by:

$$g\big(\ddot{x}, \dot{x}, x, F_0\sin(\omega_0 t)\big) = 0. \tag{33}$$

The solution of this vibrational system is considered as:

$$x = f(t). \tag{34}$$

By substitute $f(t)$ into equation (33), the general equation yields as:

$$g(t) = g\big(f''(t), f'(t), f(t), F_0 \sin(\omega_0 t)\big) = 0. \tag{35}$$

Applying initial conditions on equation (35) and its derivatives leads to:

$$\begin{cases} g(IC) = g(f''(IC), f'(IC), f(IC), \dots) = 0, \\ g'(IC) = g'(f''(IC), f'(IC), f(IC), \dots) = 0, \\ g''(IC) = g''(f''(IC), f'(IC), f(IC), \dots), = 0, \\ \dots \end{cases} \tag{36}$$

According to the initial condition (equation (20)) and the order of differential equation, n algebraic equations with n unknown parameters will be created and, therefore, constant parameters consist of $\alpha, \beta, \rho, \gamma$, angular frequency ω, initial phase φ, and θ can be easily computed. Please note that in equation (35), the higher orders of the derivatives of $g(t)$ can apply until the number of obtained equations is equal to the number of the constant coefficient of the assumed solution. In the next section the proposed AGM will be used to solve the nonlinear transversely vibrating beams with different boundary conditions.

4. Solution of AGM for nonlinear vibrating beam

This section will describe the details of solution for nonlinear transversely vibrating beams, equation (8), by AGM. Equation (8) is rewritten as:

$$q + \lambda\ddot{q} + \kappa_1 q^2 \ddot{q} + \kappa_1 q \dot{q}^2 + \kappa_2 q^4 \ddot{q} + 2\kappa_2 q^3 \dot{q}^2 + \kappa_3 q^3 + \kappa_4 q^5 = 0. \tag{37}$$

The assumed answer of this equation is given by:

$$q(t) = \exp(-\beta t)\{\alpha\cos(\omega t + \varphi_1) + \gamma\cos(2\omega t + \varphi_2)\}. \tag{38}$$

Since there is no damping component in equation (37), β is equal to zero and the $\exp(-\beta t)$ term would be removed from equation (38). Therefore, the assumed solution is:

$$q(t) = \alpha\cos(\omega t + \varphi_1) + \gamma\cos(2\omega t + \varphi_2). \tag{39}$$

By applying the initial conditions, the constant coefficients and angular frequency (ω) will be calculated. The initial conditions are applied in two ways. The first direction is to implement the initial conditions into equation (39) as:

$$q(t) = q(IC). \tag{40}$$

Thus, the assumed answer leads to:

$$q(0) = A = \alpha\cos(\varphi_1) + \gamma\cos(\varphi_2), \tag{41}$$

$$q'(0) = 0 = \alpha\sin(\varphi_1)\omega + \gamma\sin(\varphi_2)\omega. \tag{42}$$

The third equation will generate by applying the initial condition on the main differential equation which in this case is equation (37) and its derivatives as follow:

$$g(q'(IC)) = g'(q'(IC)) = 0 \dots, \tag{43}$$

This leads to obtain the following equations.

$$g\big(q(0)\big): \alpha\cos(\phi_1)\omega^2 + 4\gamma\cos(\phi_2)\omega^2 - \lambda\big(\alpha\cos(\phi_1) + \gamma\cos(\phi_2)\big) \tag{44}$$

$$-\varepsilon_1\left(\alpha\cos(\phi_1)+\gamma\cos(\phi_2)\right)^2(-\alpha\cos(\phi_1)\omega^2-4\gamma\cos(\phi_2)\omega^2)$$

$$-\varepsilon_1\left(\alpha\cos(\phi_1)+\gamma\cos(\phi_2)\right)\left(-\alpha\sin(\phi_1)\omega-2\gamma\sin(\phi_2)\omega\right)^2$$

$$-\varepsilon_2\left(\alpha\cos(\phi_1)+\gamma\cos(\phi_2)\right)^4(-\alpha\cos(\phi_1)\omega^2-4\gamma\cos(\phi_2)\omega^2)$$

$$-2\varepsilon_2\left(\alpha\cos(\phi_1)+\gamma\cos(\phi_2)\right)^3(-\alpha\sin(\phi_1)\omega-2\gamma\cos(\phi_2)\omega)^2$$

$$-\varepsilon_3\left(\alpha\sin(\phi_1)+\gamma\cos(\phi_2)\right)^3-\varepsilon_4\left(\alpha\sin(\phi_1)+\gamma\cos(\phi_2)\right)^5=0,$$

$$\begin{gathered}
g'\big(q(0)\big):-\alpha\sin(\phi_1)\omega^3-8\gamma\cos(\phi_2)\omega^3\\
-\lambda(\alpha\sin(\phi_1)\omega-2\gamma\sin(\phi_2)\omega)\\
-4\varepsilon_1\left(\alpha\cos(\phi_1)+\gamma\cos(\phi_2)\right)(-\alpha\cos(\phi_1)\omega^2-4\gamma\cos(\phi_2)\omega^2)\\
(-\alpha\sin(\phi_1)\omega-2\gamma\sin(\phi_2)\omega)-\varepsilon_1\left(\alpha\cos(\phi_1)\omega+\gamma\cos(\phi_2)\right)^2\\
(\alpha\sin(\phi_1)\omega^3+8\gamma\sin(\phi_2)\omega^3)-\varepsilon_1(-\alpha\sin(\phi_1)\omega-2\gamma\cos(\phi_2)\omega)^3\\
-8\varepsilon_2\left(\alpha\cos(\phi_1)+\gamma\cos(\phi_2)\right)^3(-\alpha\cos(\phi_1)\omega^2-4\gamma\cos(\phi_2)\omega^2)\\
(-\alpha\sin(\phi_1)\omega-2\gamma\sin(\phi_2)\omega)-\varepsilon_2(\alpha\cos(\phi_1)\omega+\gamma\cos(\phi_2)\omega)^4\\
(\alpha\sin(\phi_1)\omega^3+8\gamma\sin(\phi_2)\omega^3)-6\varepsilon_2\left(\alpha\cos(\phi_1)+\gamma\cos(\phi_2)\right)^2\\
(-\alpha\sin(\phi_1)\omega-2\gamma\sin(\phi_2)\omega)^3-3\varepsilon_3\left(\alpha\cos(\phi_1)+\gamma\cos(\phi_2)\right)^2\\
(-\alpha\sin(\phi_1)\omega-2\gamma\sin(\phi_2)\omega)-5\varepsilon_4\left(\alpha\cos(\phi_1)+\gamma\cos(\phi_2)\right)^4\\
(-\alpha\sin(\phi_1)\omega-2\gamma\sin(\phi_2)\omega)=0,
\end{gathered}\tag{45}$$

$$\begin{gathered}
g''\big(q(0)\big):-\alpha\cos(\phi_1)\omega^4-16\gamma\cos(\phi_2)\omega^4\\
-\lambda(\alpha\cos(\phi_1)\omega^2+2\gamma\cos(\phi_2)\omega^2)-7\varepsilon_1(-\alpha\sin(\phi_1)\omega-2\gamma\sin(\phi_2)\omega)^2\\
(-\alpha\cos(\phi_1)\omega^2-4\gamma\cos(\phi_2)\omega^2)-6\varepsilon_1\left(\alpha\cos(\phi_1)+\gamma\cos(\phi_2)\right)\\
(\alpha\sin(\phi_1)\omega^3+8\gamma\cos(\phi_2)\omega^3)(-\alpha\sin(\phi_1)\omega-2\gamma\sin(\phi_2)\omega)\\
-4\varepsilon_1\left(\alpha\cos(\phi_1)+\gamma\cos(\phi_2)\right)(-\alpha\cos(\phi_1)\omega^2-4\gamma\cos(\phi_2)\omega^2)^2\\
-\varepsilon_1\left(\alpha\cos(\phi_1)+\gamma\cos(\phi_2)\right)^2(\alpha\cos(\phi_1)\omega^4+16\gamma\cos(\phi_2)\omega^4)\\
-42\varepsilon_2\left(\alpha\cos(\phi_1)+16\gamma\cos(\phi_2)\right)^2(-\alpha\cos(\phi_1)\omega^2-4\gamma\cos(\phi_2)\omega^2)
\end{gathered}\tag{46}$$

$$(-\alpha\sin(\phi_1)\omega - 2\gamma\sin(\phi_2)\omega)^2 - 12\varepsilon_2\left(\alpha\cos(\phi_1) + \gamma\cos(\phi_2)\right)^3$$

$$(\alpha\sin(\phi_1)\omega^3 + 8\gamma\sin(\phi_2)\omega^3)(-\alpha\sin(\phi_1)\omega - 2\gamma\sin(\phi_2)\omega)$$

$$-8\varepsilon_2\left(\alpha\cos(\phi_1) - \gamma\cos(\phi_2)\right)^3(-\alpha\cos(\phi_1)\omega^2 - 4\gamma\cos(\phi_2)\omega^2)^2$$

$$-\varepsilon_2\left(\alpha\cos(\phi_1) + \gamma\cos(\phi_2)\right)^4(\alpha\cos(\phi_1)\omega^4 + 16\gamma\cos(\phi_2)\omega^4)$$

$$-12\varepsilon_2\left(\alpha\cos(\phi_1) + \gamma\cos(\phi_2)\right)(-\alpha\sin(\phi_1)\omega - 2\gamma\sin(\phi_2)\omega)^4$$

$$-6\varepsilon_3\left(\alpha\cos(\phi_1) + \gamma\cos(\phi_2)\right)(-\alpha\sin(\phi_1)\omega - 2\gamma\sin(\phi_2)\omega)^2$$

$$-3\varepsilon_3\left(\alpha\cos(\phi_1) + \gamma\cos(\phi_2)\right)^2(-\alpha\cos(\phi_1)\omega^2 - 4\gamma\cos(\phi_2)\omega^2)$$

$$-20\varepsilon_4\left(\alpha\cos(\phi_1) + \gamma\cos(\phi_2)\right)^3(-\alpha\sin(\phi_1)\omega - 2\gamma\sin(\phi_2)\omega)^2$$

$$-5\varepsilon_4\left(\alpha\cos(\phi_1) + \gamma\cos(\phi_2)\right)^4(-\alpha\cos(\phi_1)\omega^2 - 4\gamma\cos(\phi_2)\omega^2),$$

In sum up, there are five algebraic equations (41-46) and five unknown parameters consist of $\alpha, \gamma, \phi_1, \phi_2$ and ω. Therefore, these parameters can easily be computed.

This procedure is also applied for transversely vibrating quintic nonlinear beam (equation (18)). According to equation (43), $g(q(0))$, $g'(q(0))$, and $g''(q(0))$ are given by:

$$\begin{aligned} g(q(0)): \alpha\cos(\phi_1)\omega^2 + 4\gamma\cos(\phi_2)\omega^2 - a\alpha\cos(\phi_1) + \gamma\cos(\phi_2) \\ -b\left(\alpha\cos(\phi_1) + \gamma\cos(\phi_2)\right)^3 - c\left(\alpha\cos(\phi_1) - \gamma\cos(\phi_2)\right)^5 = 0, \end{aligned} \tag{47}$$

$$\begin{aligned} g'(q(0)): -\alpha\sin(\phi_1)\omega^3 - 8\gamma\cos(\phi_2)\omega^3 + a\alpha\sin(\phi_1)\omega + 2\gamma\sin(\phi_2)\omega \\ +3b\left(\alpha\cos(\phi_1) + \gamma\cos(\phi_2)\right)^2(-\alpha\sin(\phi_1)\omega - 2\gamma\sin(\phi_2)\omega) \\ -5c\left(\alpha\cos(\phi_1) + \gamma\cos(\phi_2)\right)^4(-\alpha\sin(\phi_1)\omega - 2\gamma\sin(\phi_2)\omega) = 0, \end{aligned} \tag{48}$$

$$\begin{aligned} g''(q(0)): -\alpha\cos(\phi_1)\omega^4 - 16\gamma\cos(\phi_2)\omega^4 \\ -a(-\alpha\cos(\phi_1)\omega^2 - 4\gamma\cos(\phi_2)\omega^2) - 6b\left(\alpha\cos(\phi_1) + \gamma\cos(\phi_2)\right) \\ (-\alpha\sin(\phi_1)\omega - 2\gamma\sin(\phi_2)\omega)^2 - 3b\left(\alpha\cos(\phi_1) + \gamma\cos(\phi_2)\right)^2 \\ (-\alpha\cos(\phi_1)\omega^2 - 4\gamma\cos(\phi_2)\omega^2)^2 - 20c\left(\alpha\cos(\phi_1) + 16\gamma\cos(\phi_2)\right)^3 \\ (-\alpha\sin(\phi_1)\omega - 2\gamma\sin(\phi_2)\omega)^2 - 5c\left(\alpha\cos(\phi_1) + \gamma\cos(\phi_2)\right)^4 \end{aligned} \tag{49}$$

$$(-\alpha\cos(\phi_1)\omega^2 - 4\gamma\cos(\phi_2)\omega^2)^2 - 0.129579\left(\alpha\cos(\phi_1) + \gamma\cos(\phi_2)\right)^4$$

$$(\alpha\cos(\phi_1)\omega^2 - 4\gamma\cos(\phi_2)\omega^2) = 0.$$

By solving the set of equations (41-42) and (47-49) together, the five unknown parameters $\alpha, \gamma, \phi_1, \phi_2$ and ω will compute for transversely vibrating quintic nonlinear beam (equation (18)). In the next section to illustrate the applicability and accuracy of the AGM method, various case studies of transversely vibrating quintic nonlinear beam will investigate.

4.1. Uniform beam carrying a lumped mass

Equation (8) represents the dimensionless unimodal temporal formulation for a uniform beam carrying a lumped mass. By considering of $\lambda = 0.5$, A=0.5, $\kappa_1 = 0.326845$, $\kappa_2 = 0.129579$, $\kappa_3 = 0.232598$, and $\kappa_4 = 0.087584$, and solving the set of equations (41-46), the unknown parameters of assumed solution for equation (8) are computed as:

$$\alpha = 0.5058380464, \gamma = -0.005838046389, \phi_1 = 6.283185307, \phi_2 = 6.283185307 \text{ and } \omega = -0.7320856112. \tag{50}$$

Therefore, the general solution of equation (8) is given by:

$$q(t) = 0.5058380464\cos(0.7320856112t + 6.283185307) - 0.005838046389\cos(1.464171222t - 6.283185307) \tag{51}$$

The following solution belongs to modes 2 with A=0.1 and $\lambda = 0.2$

$$q(t) = 0.1003687765\cos(0.4495463167t - 3.141592654) - 0.0003687764765\cos(0.8990926334t), \tag{52}$$

The response of mode 3 with A=0.01 and $\lambda = 0.3$ is presented in equation (53).

$$q(t) = -0.00002549837711\cos(0.2735572113t) - 0.01002549838\cos(0.5471144226t). \tag{53}$$

Figure 3 is shown the results obtained by AGM for uniform beam carrying a lumped mass. In order to check the preciseness of the presented method, AGM is compared with EBM and the numerical method. It is obvious that the AGM method has a good efficiency to solve uniform beam carrying lumped mass under three mode conditions. The black dashed line in Figure 3 (a) represents the AGM solution with 2 subinterval computations and 650 arithmetic operations, while the blue line denotes the EBM with 124 subinterval integration solution with 53,630 arithmetic operations. The number of arithmetic operations increases exponentially with an increasing the number of subintervals and terms.

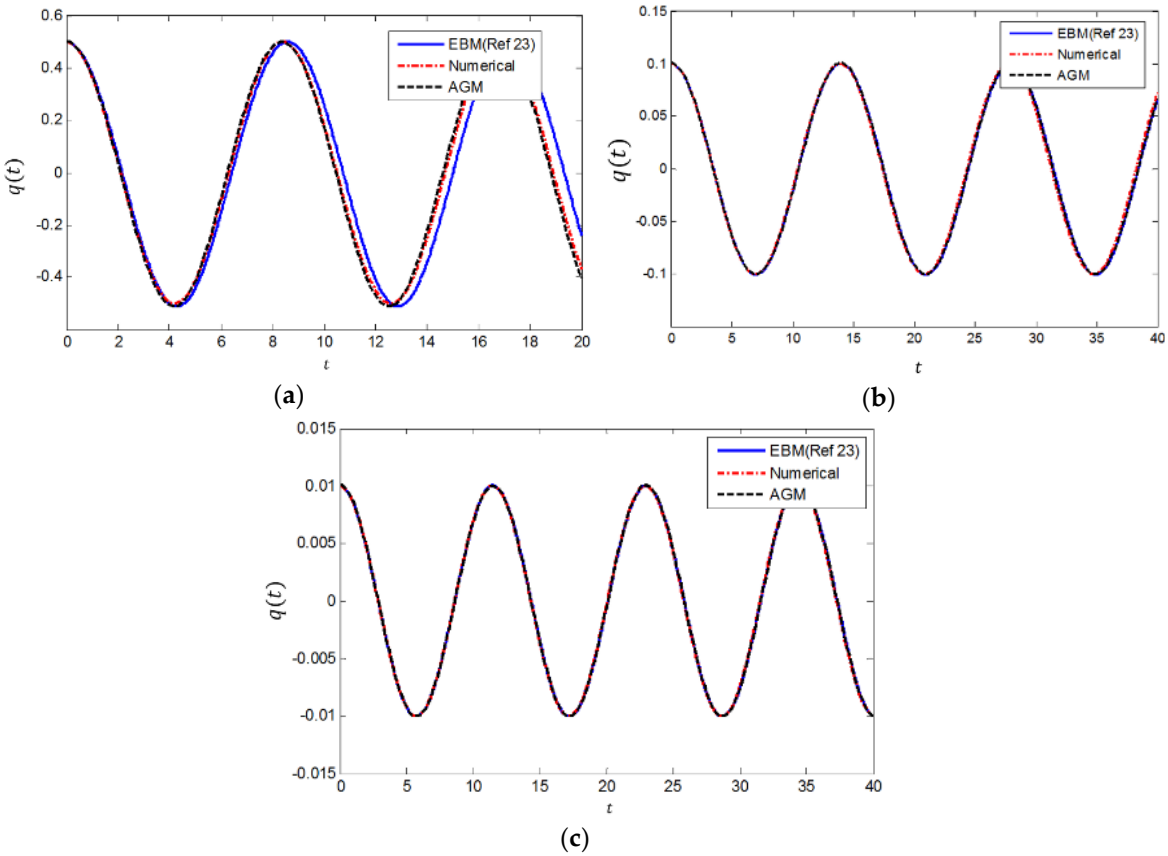

Figure 3. Comparison between obtained results of q(t) by AGM and numerical method for (a) mode1 (λ=0.5 , A=0.5), (b) mode 2 (λ=0.2 , A=0.1), and (c) mode 3 (λ=0.3 , A=0.01)

To further check of AGM accuracy in tables 2 and 3 the frequency solutions are compared with a numerical method and EBM [23, 28]. The presentation here is limited into initial parameters and solutions of frequency modes 1-3 used in [23, 28]. It is worth to note the applicability of AGM is further checked in other ranges of frequencies and yield a good agreement.

Table 2. Comparison between AGM, EBM, and exact numerical solution for mode 1 in Table 1 (λ=0.2)

A	ω_{AGM}	ω_{EBM} [20]	ω_N[20]
0.01	0.4472	0.4472	0.4472
0.05	0.4475	0.4476	0.4479
0.1	0.4483	0.4491	0.4490
0.5	0.4769	0.4923	0.4921
1	0.6017	0.6215	0.6211

Table 3. Comparison between AGM, EBM, and exact numerical solution for mode 1 in Table 1 (λ=0.5)

A	ω_{AGM}	ω_{EBM} [23]	ω_N[23]
0.01	0.7071	0.7071	0.7071
0.05	0.7073	0.7076	0.7075
0.1	0.7080	0.7084	0.7082
0.5	0.7322	0.7336	0.7333
1	0.8108	0.8116	0.8115

4.2. Transversely vibrating quintic nonlinear beam

The non-dimensional nonlinear equation of motion for transversely vibrating quintic nonlinear beam is given by:

$$\frac{d^2}{dt^2}q(\tau) + aq(\tau) + bq(\tau)^3 + cq(\tau)^5 = 0. \tag{54}$$

Three examples with different coefficient values are selected to solve in this section. Case study 1 represents a C-C beam with constant parameters of $a = 379.1140, b = -8.3480, c = -0.3673$, and $\frac{pl^2}{EI} = 10$. Figure 4 is shown the obtained results of C-C beam with proposed parameters by AGM, EBM and numerical method. This figure confirms the efficiency of AGM for this case study. Table 4 compares the natural frequencies obtained by these three methods for various values of amplitude.

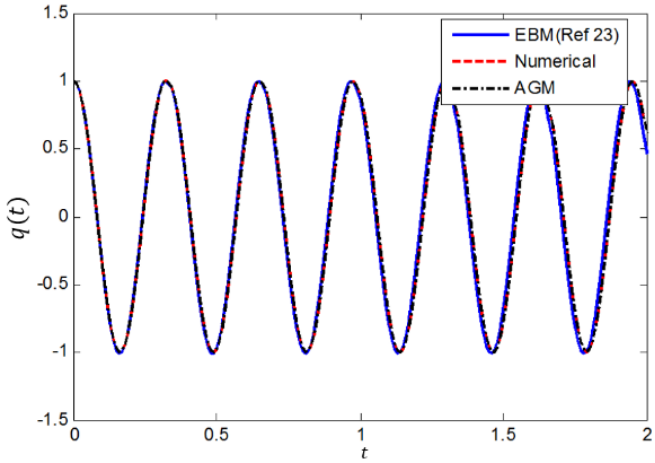

Figure 4. Result comparison between AGM , EBM, and numerical solution for case study 1 ($a = 379.1140, b = -8.3480, c = -0.3673$, $\frac{pl^2}{EI} = 10$, and A = 1)

Table 4. Comparison between AGM, EBM, and exact numerical solution (C-C beam)

A	ω_{AGM}	ω_{EBM} [23]	ω_N[23]
0.1	19.4692	19.4692	19.4692
0.3	19.4562	19.4563	19.4563
0.5	19.4305	19.4303	19.4302
1	19.3040	19.3039	19.2936

A simply supported S-S beam is selected for case study 2 where $a = 48.0611, b = -543.1630, c = -2223.874$, and $\frac{pl^2}{EI} = 5$. Figure 5 displays the obtained solution of this case with AGM, EBM, and numerical method. AGM results has very satisfactory pattern compared with other two methods. Table 5 compares the natural frequencies obtained by these three methods for various values of amplitude. And finally, Figure 6 shows the results of case study 3 for a simply supported S-S beam where $a = 48.0611, b = -543.1630, c = 2223.874$, and $\frac{pl^2}{EI} = 5$. Table 6 compares the natural frequencies obtained by these three methods for various values of amplitude.

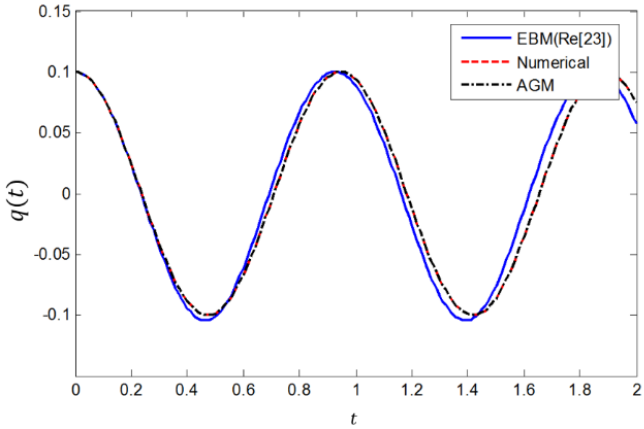

Figure 5. Result comparison between AGM , EBM, and numerical solution for case study 2 ($a = 48.0611, b = -543.1630, c = -2223.874, \frac{pl^2}{EI} = 5$, and $A = 0.1$)

Table 5. Comparison between AGM, EBM, and exact numerical solution (S-S beam)

A	ω_{AGM}	ω_{ebm}[23]	ω_N[23]
0.1	6.7741	6.6421	6.6417
0.3	4.8036	4.6803	4.6792
0.5	5.1944	5.2246	5.5985
1	30.7202	30.6259	30.4103

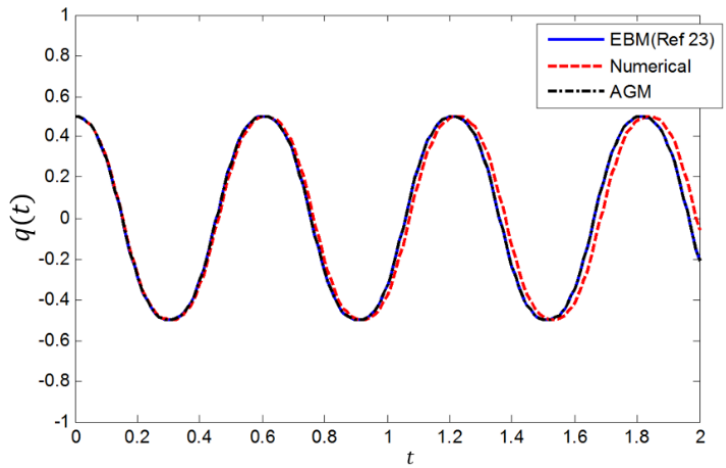

Figure 6. Result comparison between AGM , EBM, and numerical solution for case study 3 ($a = 48.0611, b = -543.1630, c = 2223.874 \frac{pl^2}{EI} = 5$, and A=0.5)

Table 6. Comparison between AGM, EBM, and exact numerical solution for S-S beam (case study 3)

A	ω_{AGM}	ω_{ebm}[23]	ω_N[23]
0.1	9.4796	9.4801	9.4797
0.3	8.8540	8.8544	8.8540
0.5	10.3893	10.2601	10.3891
1	33.2376	33.4156	33.2373

It is very important to have an accurate parametric solution towards understanding of non-linear vibration characteristics [32-37]. The results illustrated in this section clearly demonstrate that AGM

are very effective and convenient for the nonlinear beam vibration for which the highly nonlinear governing equations exist. This method in comparison with EBM has more simplicity in solution steps by assuming a trial function and then set of algebraic calculation. It makes the solution 's steps straightforward and in the same time keeps the promising accuracy. Note that the AGM method can be easily expanded to predict the beam response under different boundary conditions. Furthermore, divergency in the nonlinear equations seems small.

It is worth to highlight a summary of the excellence of AGM in comparison with EBM or alternative numerical approaches as follows. While the number of initial conditions should be matched with the order of differential equations in nearly all alternative methods, AGM can create an additional new initial condition in regard to the own differential equation and its derivatives. It brings AGM in a priority list of operation for nonlinear equations with unknown initial conditions. A set of algebraic equations generate in this method are easy to solve and yield into obtain the constant coefficients of the trial function with acceptable accuracy.

5. Conclusion

The common numerical methods rarely give us intuitive insights about the effect of all associated parameters in the nonlinear subjects. Many researchers are working to develop an effective analytical method in order to investigate the solution of high nonlinear equations. In this study, the AGM which already used in heat transfer science is employed for the first time to solve nonlinear transverse vibration beam with odd and even nonlinearity terms. The simply supported and clamped-clamped structures with different initial parameters presented in this research yield good agreement with EBM and numerical approach. The natural frequencies obtained by these three methods for various values of amplitude are clearly stated the applicability of AGM. Results show that the present method is very effective, convenient and accurate for transverse vibration beam. This study notices that AGM is a powerful technique and accurate method to solve nonlinear equations. The solution of transverse vibrating beam analytically provides us a chance to look at in-depth the relation of working parameters. In comparison of other semi analytical methods, AGM is more straightforward to apply. As a downside of the method in the same as other iteration techniques, in AGM a series of iteration are required to process. The more numbers of series sentence, the more precise solution is tended to achieve. Consequently, any inaccuracy in each iteration will accumulate into the final solution. With regard to the aforementioned explanations, AGM can be easily extended to solve other engineering nonlinear problems.

Author Contributions: Iman Khatami is an assistant professor in mechanical engineering at Chabahar Maritime University in Iran. Iman has assisted in solving equations with the software, programming, validation of result, and writing original draft. Mohsen Zahedi is a MSc research student in computer engineering at Shiraz University in Iran. He has substantial backgrounds in artificial intelligence, data analysis, computational modelling, and has versatile knowledge and experience in signal processing. He has contributed in methodology development, programming, data analysis and editing original draft. Abolfazl Zahedi is a senior lecturer at De Montfort University, UK. His main research interests are computational material modelling, additive manufacturing, tissue engineering, and vibration analysis. He is interested to use applied mathematics to solve engineering problems, particularly analytical methods to facilitate design. He supervises the research study, and assistance in project administration, formal analysis and reviewed and edited the manuscript.

Funding: This research received no external funding.

Acknowledgments: Authors acknowledge the AGM developed by D. D. Ganji [31] to solve the nonlinear transversely vibrating beam.

Conflicts of Interest: The authors declare no conflict of interest

References

1. Bauchau O.A.; Craig J.I.; Euler-Bernoulli beam theory. In *Structural analysis solid mechanics and its applications*, Publisher: Book chapter Springer, Dordrecht, 2019; Volume 163, pp. 173-221.

2. Cowper G.R.; On the accuracy of Timoshenko's beam theory. *JEMD* **1968**, *Volume 94*, pp. 1447-1454.
3. Zahedi S.A.; Babitsky V.; Modeling of autoresonant control of a parametrically excited screen machine. *J. Sound Vib.* **2016**, *Volume 380*, pp. 78-89.
4. Yupeng, Q; Zhen W.; Li Z; Dynamics of nonlinear transversely vibrating beams: Parametric and closed-form solutions *App. Math. Model*. **2020** *Volume 88*, pp. 676-687.
5. Hieu, D. V.; Hai N.Q.; Free Vibration Analysis of Quintic Nonlinear Beams using Equivalent Linearization Method with a Weighted Averaging, *J. Appl. Comput. Mech*., **2019** *Volume* 5(1), pp. 46-57
6. Raju L.S.; Rao G.V.; Raju R.R.; Effect of longitudinal or in-plane deformation and inertia on the large amplitude flexural vibration of slender beams and thin plates. *J. Sound Vib.* **1976**, *Volume 49*, pp. 415-422.
7. Sarma B.S.; Vardan T.K.; Parathap H.; On various formulation of large amplitude free vibration of beams. *COMPUT STRUCT* **1988**, *Volume 29*, pp. 959-966.
8. Bhashyam, G.R.; Prathap, G.; Galerkin finite element method for nonlinear beamvibrations, *J. Sound Vib*. **1980**, *Volume* 72, pp. 191–203.
9. Mohammadian, M; Nonlinear free vibration of damped and undamped bi-directional functionally graded beams using a cubic-quintic nonlinear model, *Comp. Stru*. **2021** *Volume* 225
10. Evenson, D.A.; Nonlinear vibrations of beams with various boundary conditions. *AIAA J*. **1968** *Volume* 6, pp. 370–372.
11. Asghari, M.; Kahrobaiyan, M.H.; Nikfar, M.; Ahmadian, M.T; A size-dependent nonlinear timoshenko microbeam model based on the strain gradient theory, *Acta Mech*. **2012** *Volume* 223, pp.1233–1249.
12. Emam, S.A.; Nayfeh, A.H.; Non-linear response of buckled beams to 1:1 and 3:1 internal resonances, *Int. J. Non-Linear Mech*. **2013,** *Volume* 52 pp. 12–25
13. Formica, G.; Arena, A., Lacarbonara, W.; Dankowicz, H.; Coupling FEM with parameter continuation for analysis of bifurcations of periodic responses in nonlinear structures, *J. Comput Nonlinear Dynam*. **2012** *Volume* 8 (2) 021013, http://dx.doi.org/10.1115/1.4007315
14. Kazemnia M.; Zahedi S.A.; Vaezi M.; Tolou N.; Assessment of modified variational iteration method in BVPs high-order differential equations. *INT J APPL MECH* **2008**, *Volume 8 (22)*, pp. 4192-4197.
15. Khatami I.; Tolou N.; Mahmoudi J.; Rezvani M.; Application of homotopy analysis method and variational iteration method for shock wave equation. *Appl. Sci.* **2008**, *Volume 8 (5)*, pp. 848-853.
16. Ganji D.D.; Sadighi A.; Khatami I.; Assessment of two analytical approaches in some nonlinear problems arising in engineering sciences. *Phys. Lett. A* **2008**, *Volume 372 (24)*, pp. 4399-4406.
17. Fereidoon A.; Zahedi S.A.; Ganji D.D.; Rostamiyan Y.; Homotopy perturbation method to solving nonlinear WBK equations. *Far East J. Dyn. Syst.* **2008**, *Volume 10 (2)*, pp. 239-254.
18. Tolou N.; Khatami I.; Analytical solution of nonlinear vibrating systems. *Am. J. Appl. Sci.* **2008**, *Volume 5(9)*, pp. 1912-1224.
19. Tolou N.; Mahmoudi J.; Ghasemi M.; Khatami I.; Barari A.; On the non-linear deformation of elastic beams in an analytic solution. *Asian J. Sci. Res.* **2008**, *Volume 1*, pp. 437-443.
20. Mirgolbabaee H.; Ledari S.T.; Ganji D.D.; New approach method for solving Duffing-type nonlinear oscillator. *Alex. Eng. J.* **2016**, *Volume 55*, pp. 1695–1702.
21. Sedighi H. M.; Daneshmand F.; Nonlinear transversely vibrating beams by the homotopy perturbation method with an auxiliary term, *J. Appl. Comu. Mech*. **2015** *Volume 1*, pp. 1-9
22. Meier C., Wall W.A., Popp A., A unified approach for beam-to-beam contact, Comput. *Methods Appl. Mech. Engrg*. **2017,** *Volume 315*, pp. 972–1010.
23. He J.H.; Preliminary report on the energy balance for nonlinear oscillations. *Mech. Res. Commun* **2002**, *Volume 29 2–3*, pp. 107–111.
24. Chaudhari T.D., Maiti S. K., Modelling of transverse vibration of beam of linearly variable depth with edge crack, *Eng. Fract. Mech*. **1999,** *Volume* 63, pp. 425–445.
25. Khajavi R., A novel stiffness/flexibility-based method for euler-bernoulli/timoshenko beams with multiple discontinuities and singularities, **2016** *Appl. Math. Modell*. *Volume* 40 pp. 7627–7655.
26. Ghayesh M. H., Nonlinear vibration analysis of axially functionally graded shear-deformable tapered beams, *App. Math. Mod*., **2018** Volume 59, pp. 583-596
27. Ye S. Q. , Mao X. Y. , Ding H., Ji J. C ., Chen L.Q.; Nonlinear vibrations of a slightly curved beam with nonlinear boundary conditions, **2020** *Int. J. Mech. Sci*., Volume 168
28. Saadi F.; Azizpour M. J.; Zahedi S.A.; Analytical solutions of Kortweg-de Vries (KdV) equation, World academy of science. *J. Eng. Technol.* **2010**, *Volume 69*, pp. 171-175.

29. Parnell L.A.; Cobble M.H.; Lateral displacement of a cantilever beam with a concentrated mass. *J. Sound Vib.* **1976**, *Volume 44*, pp. 499-510.
30. Hieu D.V.; Hai N.Q.; Free vibration analysis of quintic nonlinear beams using equivalent linearization method with a weighted averaging. *INT J APPL MECH* **2019**, *Volume 5 (1)*, pp. 46-57.
31. Zahedi S.A.; Fazeli M.; Tolou N.; Analytical solution of time-dependent non-linear partial differential equations using HAM, HPM and VIM. *Appl. Sci.* **2008**, *Volume 8*, pp. 2888-94.
32. Akbarzade M.; Farshidianfar A.; Nonlinear transversely vibrating beams by the improved energy balance method and the global residue harmonic balance method. *Appl. Math. Model.* **2017**, *Volume 45*, pp. 393-404.
33. Case J.; Chilver L.; Ross C.T.F. *Strength of Materials and Structures*, 4th ed.; 1999.
34. Mirgolbabaee. H.; Ledari, S.T.; Ganji, D.D.; New approach method for solving Duffing-type nonlinear oscillator, *Alexandria Eng J* **2016** *Volume* (55), pp. 1695–1702
35. Khatami I.; Zahedi E.; Zahedi M.; Efficient solution of nonlinear duffing oscillator, *J. App. Comp. Mech.* **2020** *Volume* 6 (2), pp. 219-234
36. Kostrzewski. M.; Securing of safety by monitoring of technical parameters in warehouse racks, in high bay warehouses and high storage warehouses –literature review of the problem, *LogForum* **2017** *Volume* 13 (2), pp. 125-134.
37. Sławski Ł.; Kosno Ł.; Świt G.; Evaluation of precast pre-post-tensioned concrete bridge beams with the use of GPR method, *Proc. Eng.* **2016** *Volume 156*, pp. 443-450.